SUPPORT

SPACER SUPPORTS

Two Styles Choose between a locking or tension barb end.

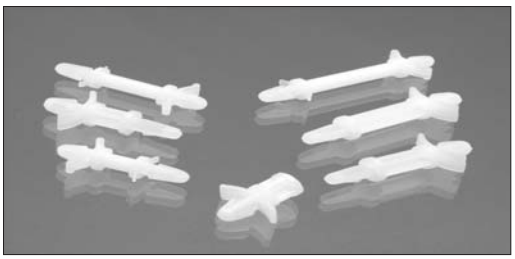

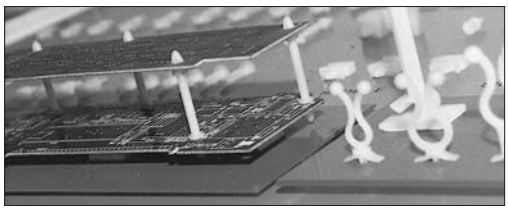

For providing needed spacing between printed circuit boards and chassis.

■Tension Type

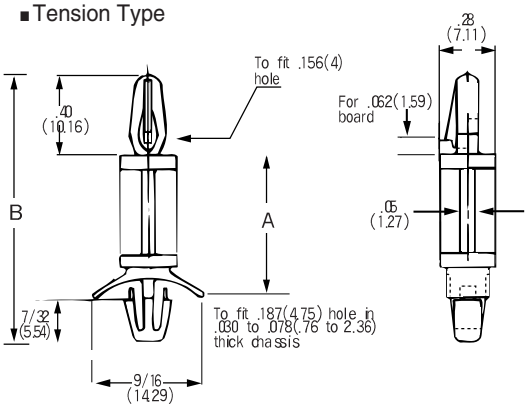

■Locking Type

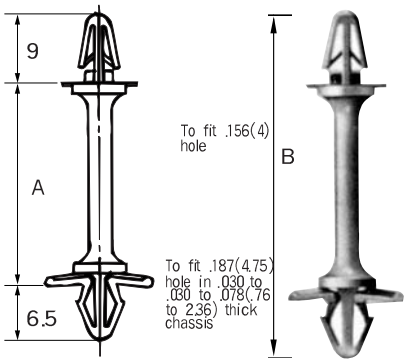

■Double Tension Type

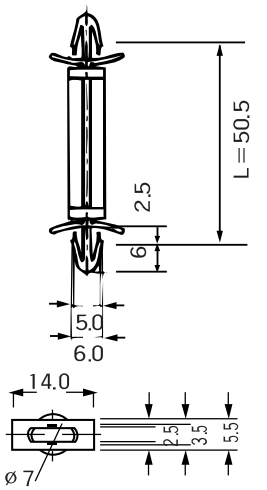

- Both ends lock by hand; no tools required
- Strong, dependable grip
- Materials: Nylon 6/6,

Two Materials

6/6 nyion-natural color with a 94V-2 flammability rating.

Fire retardant nylon-off-white color with a 94V-0 flammability rating.

Available in 12 sizes

PART NO.	Dimensions(mm) A	Dimensions(mm) B	BARB TYPE		PART NO.	Dimensions(mm) A	Dimensions(mm) B	BARB TYPE
DASS-4N	4.8	22.8	Tension		DASS-19N	19.0	37.0	Tension
		20.1	Locking				34.5	Locking
DASS-6N	6.4	24.4	Tension		DASS-22N	22.2	40.2	Tension
		21.9	Locking				37.7	Locking
DASS-9N	9.5	27.5	Tension		DASS-25N	25.4	43.4	Tension
		25.0	Locking				40.9	Locking
DASS-11N	11.1	29.1	Tension		DASS-28N	28.5	46.5	Tension
		26.6	Locking				44.0	Locking
DASS-13N	12.7	30.7	Tension		DASS-31N	31.7	49.7	Tension
		28.2	Locking				47.2	Locking
DASS-16N	15.8	33.8	Tension		DASS-35N	34.9	52.9	Tension
		31.3	Locking				50.4	Locking

· B-50N

- Install quickly by hand
- Releasable for repairs
- Barbed Arrow mounts on both ends snap-lock into .156″ (4mm) dia. holes
- Available on request with two .187″ (4.75 mm) mounts or a .156/.187″ (4/4.75 mm) commbination

PCB SUPPORT

- MATERIAL : NYLON 66. UL 94V-2
- COLOR : NATURAL

NO	PART NO	A	B	HOLE C DIA ϕ	HOLE D DIA ϕ
A	DPS	15.3	29.3	7.0	4.0
	DPSH 23	23.0	36.9	7.0	4.0
B	DPS B 27	27.3	39.9	4.8	4.0

PART NO	A
DPS-14	14.7mm
DPS-22	22.2mm

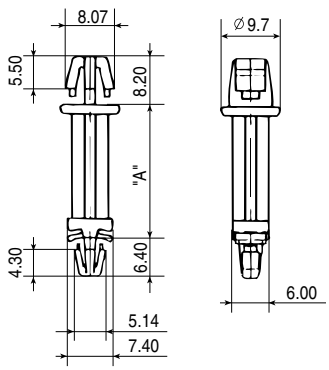

SUPPORT

SCREW SUPPORT

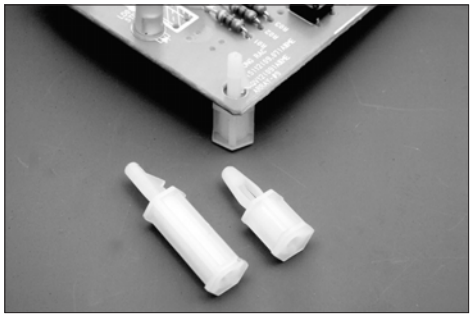

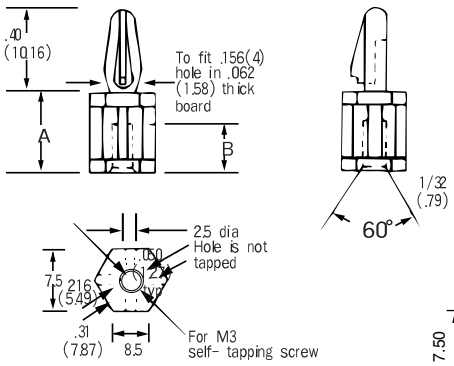

Material : Nylon 6/6

A support with minimal chassis protrusion.
Ideal for slim line or limited space applications.

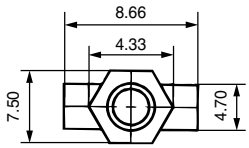

Part No.		Dim. A (mm)	Dim. B (mm)
Natural	Flame Retar,		
DASC-4N	DASC-4R	(6.2)	(5.16)
DASC-5N	DASC-5R	(8.0)	
DASC-6N	DASC-6R	(9.4)	
DASC-7N	DASC-7R	(11.5)	
DASC-8N	DASC-8R	(12.5)	
DASC-10N	DASC-10R	(15.7)	7.9
DASC-12N	DASC-12R	(18.8)	(7.94)

Part No.	A	B	C
DASC-H6N	6	7.3	16
DASC-H10N	10	11.3	20

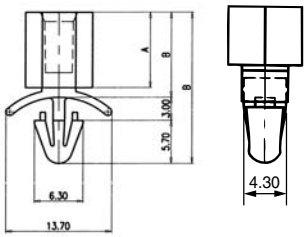

KEY SCREW SUPPORT

Part No.	"L"
DAKSC-6N	9.8
DAKSC-10N	15

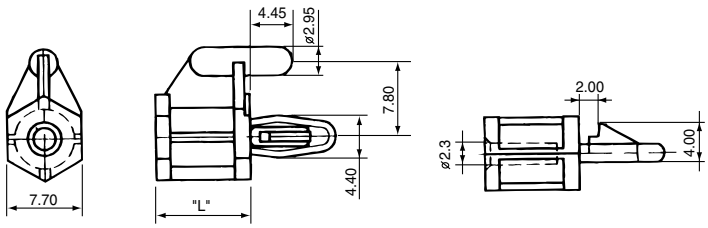

BOLT SUPPORTS

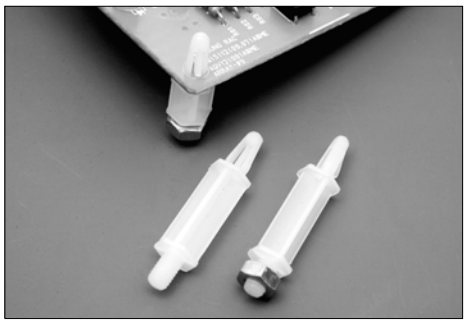

Studded Supports
for Screw Fastening

A reusable one-piece bolt it board support with a #8-32 thread for speedy installation. Requires no tools. Choice of nylon or flame retardant material.

Unit : mm

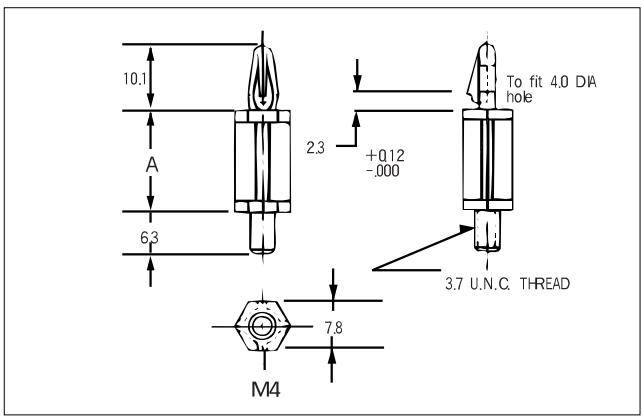

Nut available upon request.

Part No		Nom. Dim. A
U.L. 94 V-2 NYLON	U.L. 94 V-0 NYLON	
DABS-2N	DABS-2R	5.0
DABS-4N	DABS-4R	6.5
DABS-6N	DABS-6R	9.5
DABS-8N	DABS-8R	12.7
DABS-10N	DABS-10R	16.0
DABS-12N	DABS-12R	20.0
DABS-16N	DABS-16R	25.0

SUPPORT

CARD SUPPORT

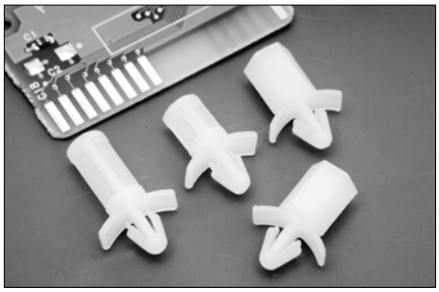

- Supports heavily loaded PC boards
- Easy to install, snap-in spacers made of high dielectric strength nylon feature a rigid support post

- Material: Nylon 6/6,
- Standard Pack: 1000 per bag

Part No	Hole dia,	M
CS-H10N	5.6	11.81
CS-H13N	5.6	11.81

Part no. Nylon	Part no. Flame Retardont	Dim. "A"
CS4N	CS4R	3/16(4.8)
CS6N	CS6R	1/4(6.4)
CS9N	CS9R	3/8(9.5)
CS11N	CS11R	7/16(11.1)
CS13N	CS13R	1/2(12.7)
CS16N	CS16R	5.8(15.9)
CS19N	CS19R	3/4(19.1)
CS22N	CS22R	7/8(22.2)
CS-H 10N	CS-H10R	.39(10)
CS-H 13N	CS-H13R	.51(13.2)

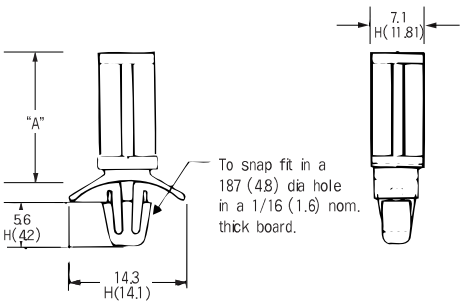

NOTE : For accurate spacing between bottom of chassis and bottom of PC board, add .10(2.5) to "A" dimension.

SPRING HOLDER

PART NO.	DASH-13

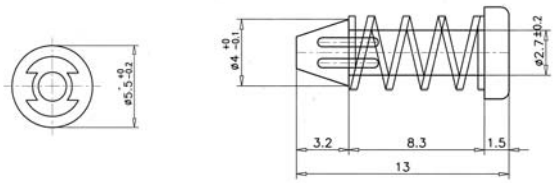

LOCK SCREW SUPPORT

PART NO.	DALSC-16

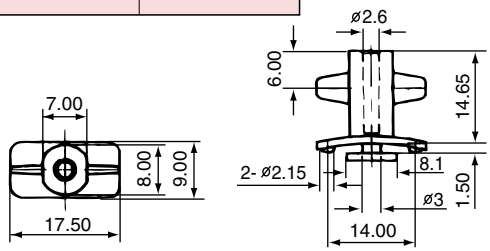

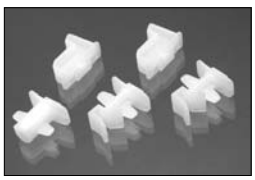

PART NO.	DAPH-16

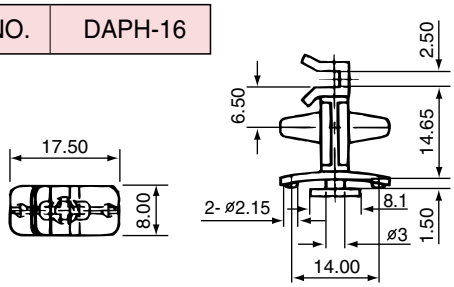

BREADTH BARD

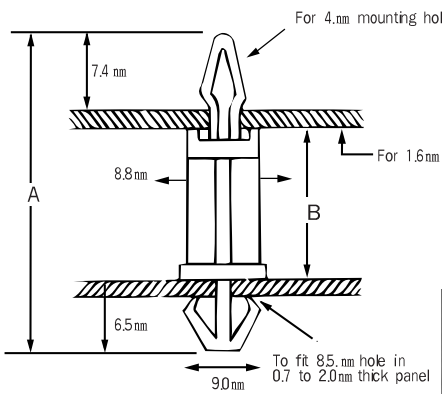

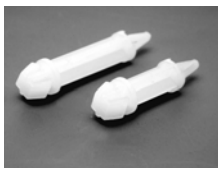

- MATERIAL : NYLON 6/6

PART NO	DIMENSION(mm)		Pacjage Q'TY
	A	B	
DASS-B4N	22.2	6.0	1,000
DASS-B5N	24.0	8.0	
DASS-B6N	26.0	10.0	
DASS-B8N	29.0	13.0	
DASS-B10N	32.0	16.0	
DASS-B12N	35.0	19.0	
DASS-B14N	38.0	22.0	
DASS-B16N	41.0	25.0	
DASS-B18N	45.0	29.0	

SUPPORT

BUTTON SUPPORT

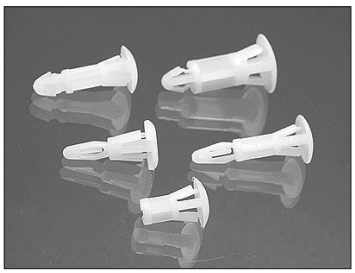

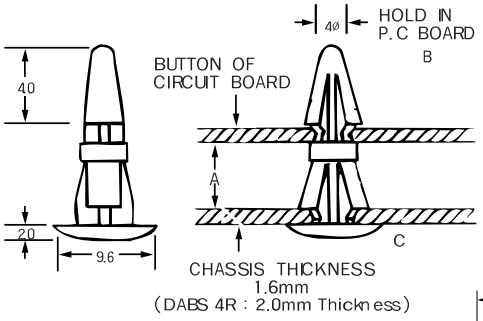

(UNIT : mm)

Part No.	A	B	C
DABS 4R	4	4	5
DABS 6R	6	4	5
DABS 8R	8	4	5
DABS 10R	10	4	5
DABS 12R	12	4	5
DABS 16R	16	4	5
DABS 22R	22	4	5
DABS 26R	25.4	4	5
DABS 32R	31.7	4	5
DABS 35R	3.5	4	5

Two Materials

6/6 nylon-natural color with a 94V-2 flammability rating.
fire retardant nylon-off-white color with a 94V-0 flammability rating.

- Good Chassis-like appearance.
- Fixating of P.C.board for making opening is possible, by pressing with hands without tools.
- Operation is easy, production efficiency is increased.

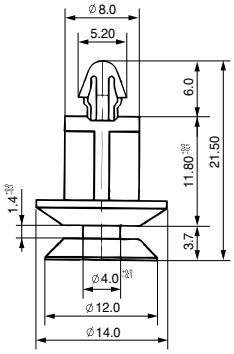

PART NO.	DAGS-12N

CARD BOARD SUPPORT

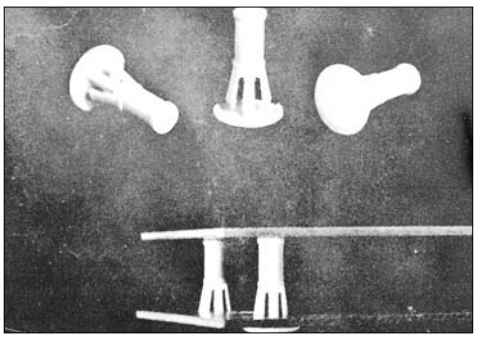

Part No	A(mm)
DACBS 4R	4.0
DACBS 6R	6.5
DACBS 8R	8
DACBS 10R	10
DACBS 12R	12.2
DACBS 16R	16
DACBS 22R	22
DACBS 26R	26
DACBS 32R	32
DACBS 35R	35

- Provide additional support for heavily loaded PC boards
- Inserts from chasis underside
- Thin button head fo minimum protrusion
- Material: Nylon 6/6
- Standard Pack:1000 per bag

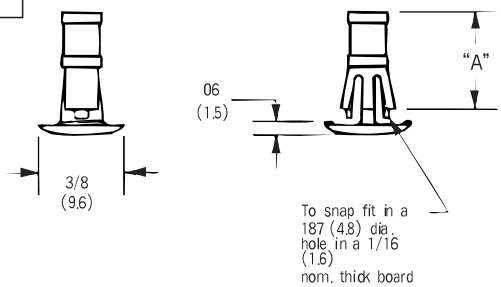

KEY SUPPORT

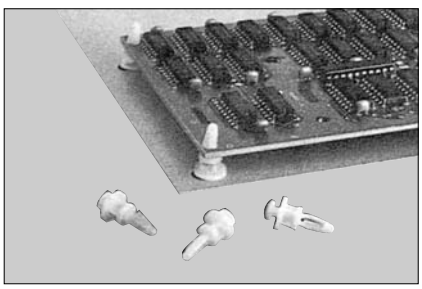

PART NO.	DAKS-01

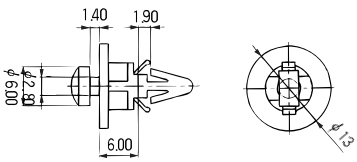

- Installs quickly by hand
- Board mount end locks in place
- Chassis mount end slides into keyslot hole is easily removed for repairs or changes

- Minimal protrusion of only .10″ (2.5mm) on underside of chassis
- Material: Nylon 6/6;
- Color: Natural
- Standard Pack: 1000 per bag

SUPPORT

MINIATURE SUPPORT POST

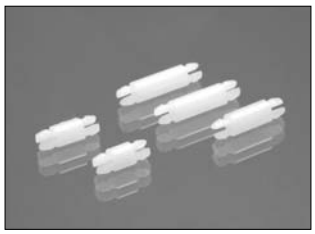

Miniaturize packaging at Low cost.
Install by hand with no pins or screws
Chassis-mount head locks permanently
Board-mount head is releasable

Both ends fit .152″ ± .002″ (3.85 ± .05 mm) diameter hole in 1/16″
Material: Nylon 6/6.

Color: Natural

Part No	A (inches(mm))
MSP-2N	1/8 (3.18)
MSP-3N	3/16 (4.75)
MSP-4N	1/4 (6.35)
MSP-6N	3/8 (9.53)
MSP-8N	1/2 (12.35)

Tolerance ±01(25)
Fraction ±1/64

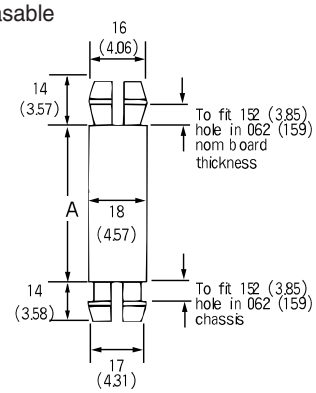

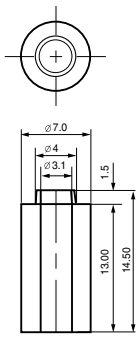

PART NO.	DASH-13

P. C. B. SUPPORT

PART NO.	DAPS 6.5

- Material : NYLON 6 or 66
- Color : Natural
- Hole Dia : ø4

PART NO	A
DAPS-6	6.0
DAPS-10	10.0
DAPS-18	18.0

- Thickness : 1.6t
- Hole Dia : ø3.5

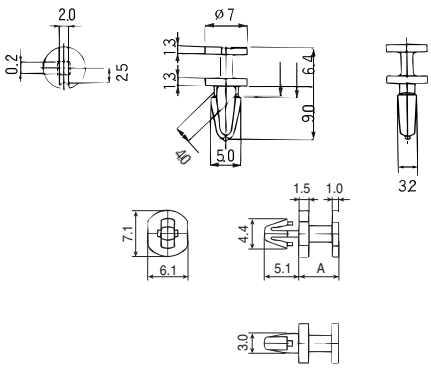

EDGE BOARD SUPPORT

PART No.		Nom. Dim.
UL94 V-2 NYLON	UL94 V-0 NYLON	"A"
DAEBS-8N	DAEBS-8R	8
DAEBS-9N	DAEBS-9R	9.5
DAEBS-13N	DAEBS-13R	12.7
DAEBS-16N	DAEBS-16R	16
DAEBS-19N	DAEBS-19R	19
DAEBS-22N	DAEBS-22R	22.2
DAEBS-25N	DAEBS-25R	25.4

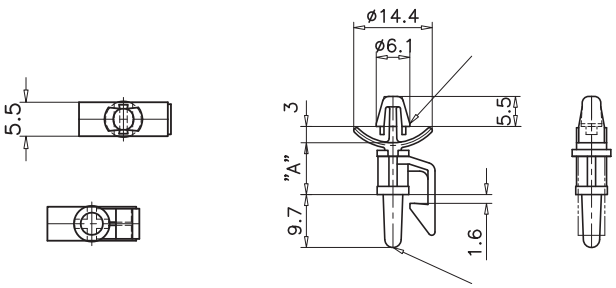

PART No.		Nom. Dim.
UL94 V-2 NYLON	UL94 V-0 NYLON	"A"
DAEBS-8NS	DAEBS-8RS	8
DAEBS-9NS	DAEBS-9RS	9.5
DAEBS-13NS	DAEBS-13RS	12.7
DAEBS-16NS	DAEBS-16RS	16
DAEBS-19NS	DAEBS-19RS	19
DAEBS-22NS	DAEBS-22RS	22.2
DAEBS-25NS	DAEBS-25RS	25.4

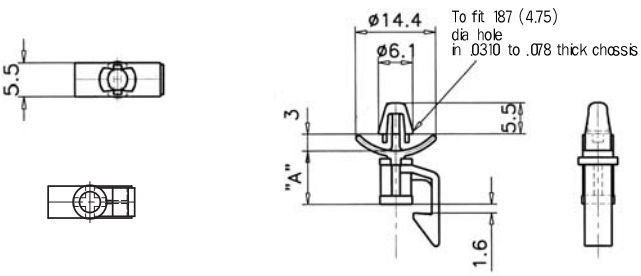

SUPPORT

BUTTON LOCKING SUPPORT

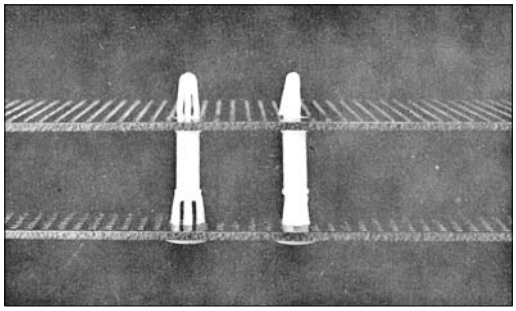

- The advantage of this support is that it inserts into both holes from chassis underside
- Spring lock support installs and releases by hand
- Minimal protrusion under chassis
- Attractive button head

- Material: Nylon 6/6,
- Color: Natural or Black
- Standard Pack: 1000 per bag

Unit:mm

Part. #	"A"	"B"	"C"	"D"	Bd. Hold Dia.	Chss. Hole Dia.
					(1,6) Panel Thkns.	
BLS 6R BLS 8R BLS 10R BLS 12R BLS 16R BLS 18R	6 8 10 12 16 18	9.0	1.5	9.5	4.0	5.5
BLSS 6 BLSS 10 BLSS 12 BLSS 16	6.4 9.5 12.7 15.9	8.7	1.0		3.2	4.8

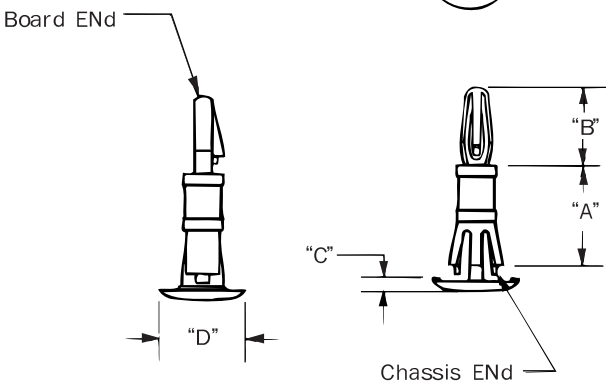

D-COIL HOLDER

PART NO.	DADC-1

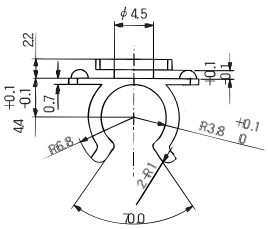

PART NO.	DADC-2

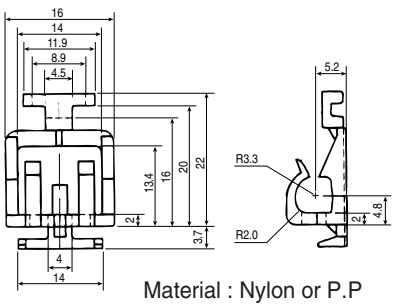

Material : Nylon or P.P

PART NO.	DADC-98

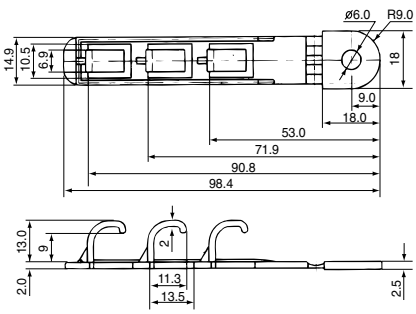

PART NO.	DADCS-32

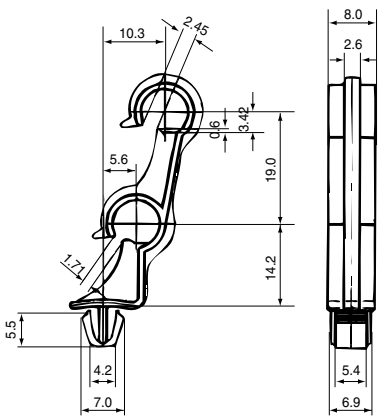

SUPPORT

P.C.B.HOLDER

PART NO.
DAPH-A

- Easily pushed into P.C.plate by hand without any tool.
- Easy to replace and efficient in producivity
- Easy to replace when required maintenance or replacement is required.
- Material : Nylon 66

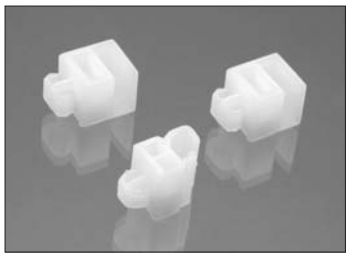

PART NO.
DAPH-B

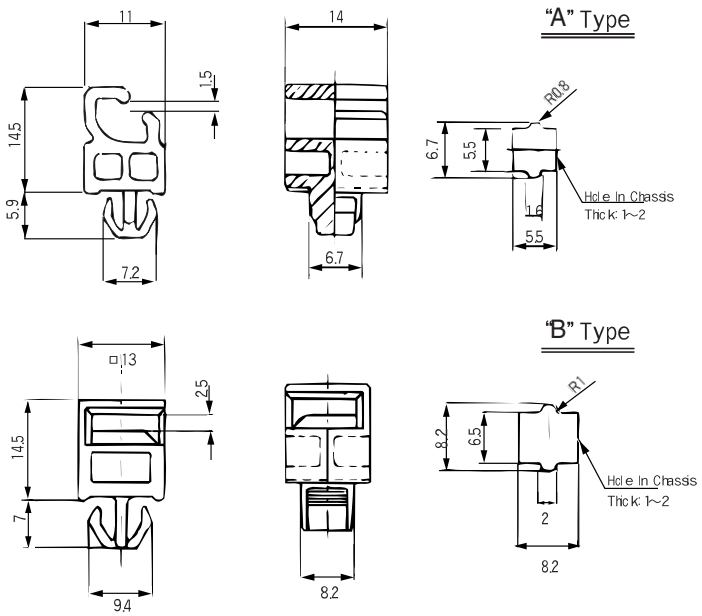

P.C.PLATE

PART NO.
DAPC-7

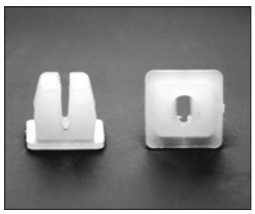

- Easily pushed into P.C.plate by hand without tool.
- Easy to replace and efficient in productivity
- Easy to replace when required maintenance or replacement.
- Material : Nylon 66

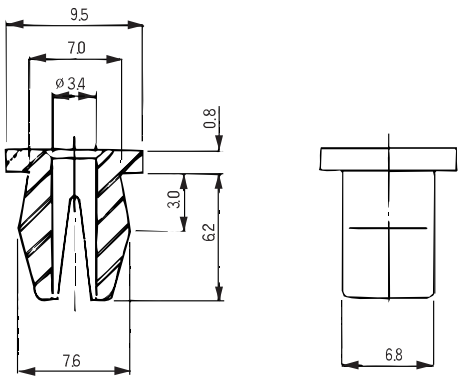

SUPPORT PIN

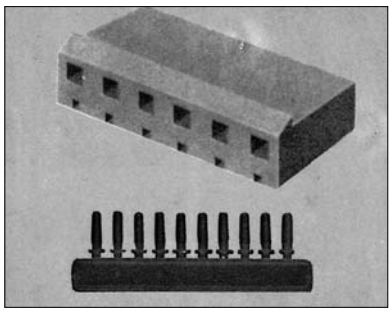

- Material : Nylon 66
- Molex HOUSING : 5239-N
  5239-N2

PART NO.
HSP 201

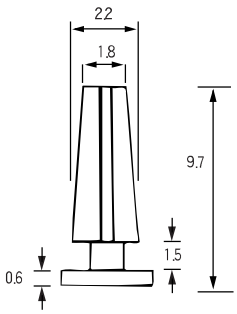

LED HOLDER

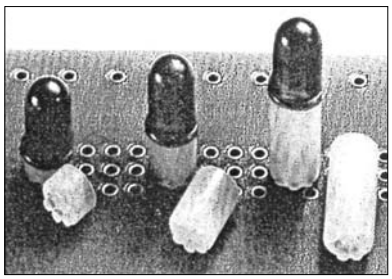

- Material : Nylon 66
- Color : Natural
- Economical assembly solution for mounting LEDS and easy insertion of LED spacers.

PART NO.
DALH-13

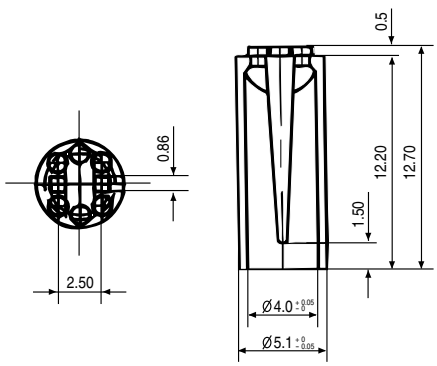

SUPPORT

SCREW LOCK SADDLE

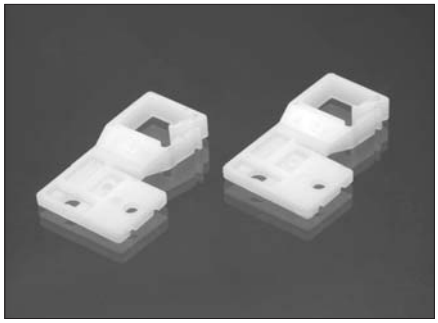

PART NO.
DASC-119

1. Material : Nylon 66
2. Color : Natural
3. Flameability : UL 94V-2 or UL 94V-0

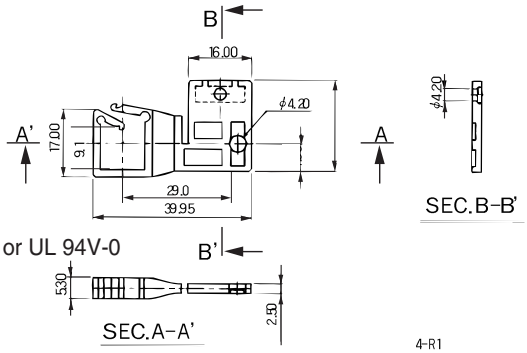

SPACER SUPPORT

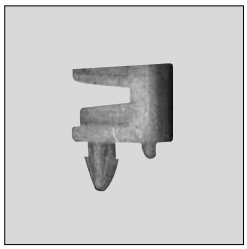

PART NO.
DATLM-4757

1. Material : Nylon 66
2. Color : Natural
3. GENERAL TOLERENCE : ±0.1

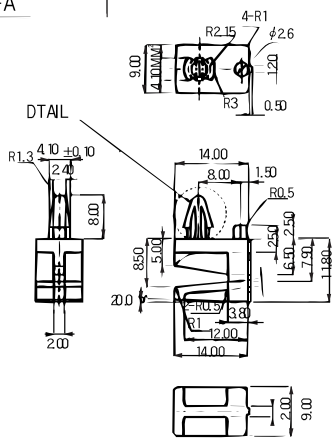

HINGED SUPPORT

PART NO.
DAHS-30

- Material : Nylon 6/6
- Color : Natural

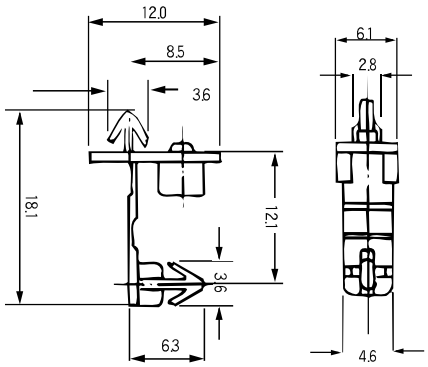

HINGED SUPPORT

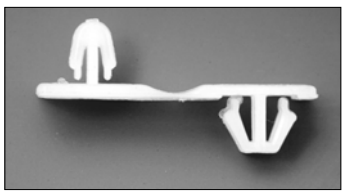

PART NO.
DAHS-50

- Material : Nylon 6/6
- Color : Natural

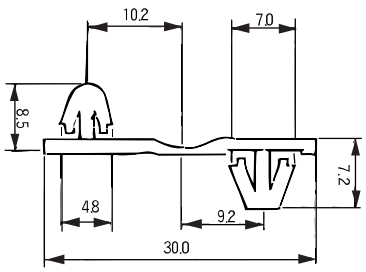

PCB JUMPER

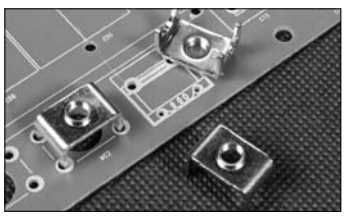

PART NO.
DAPJ-9

- Material : C2680/1.3t

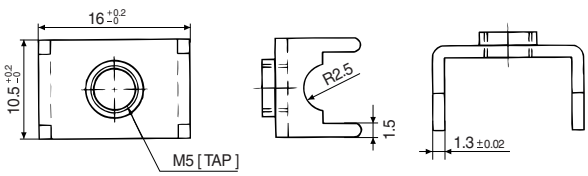

SUPPORT

TR SUPPORT

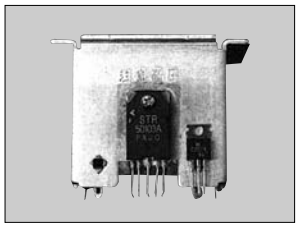

PART NO.
TRS 32

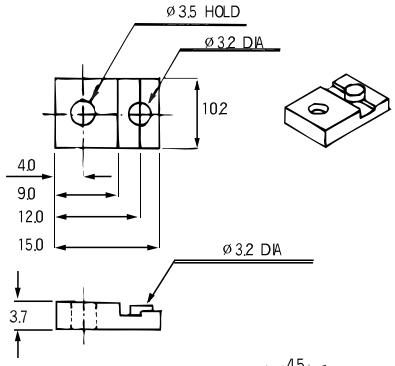

RACK RIVET

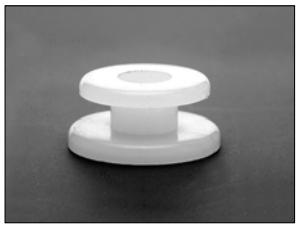

PART NO.
DAR 1987

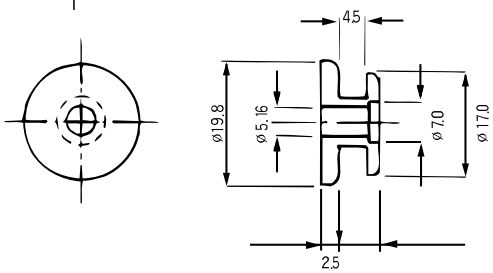

TR INSULATOR

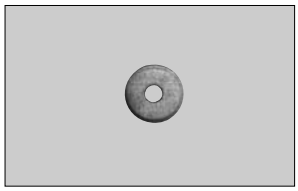

• Material : NYLON 66

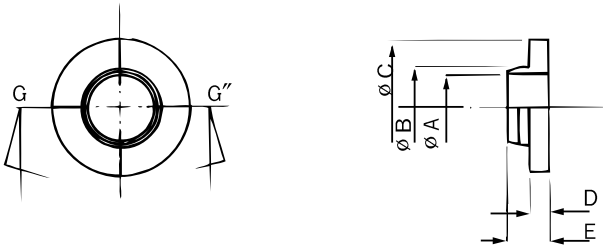

PART NO	CORD	A	B	C	D	E
DATR 2935	INSULATOR	2.9	3.5	5.9	0.8	2.6
DATR-2945	SPACER	2.9	4.5	7.8	1.9	4.0

PUSH CLIP

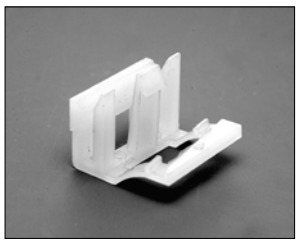

• Material : NYLON 66

PART NO.
DAPC 1814

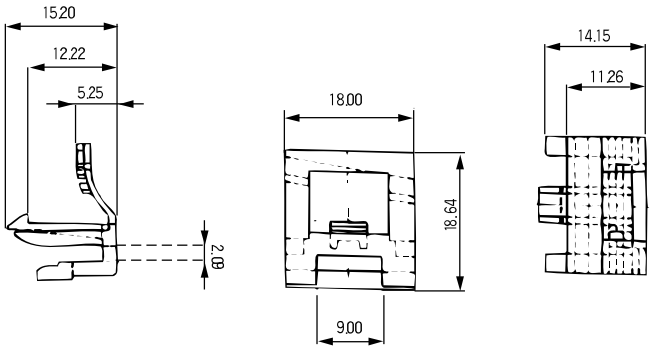

LOCK MUONT

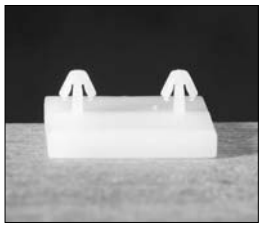

• Material : NYLON 66
Fix 3.0mm Dia, hole

PART NO.
DALM-16

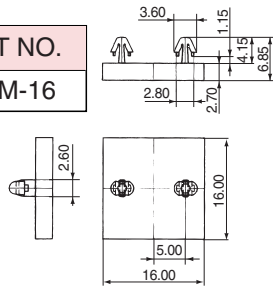

MOUNT BOARD

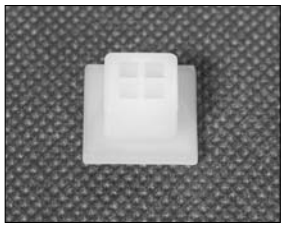

• Material : NYLON 66
with double foam tape.

PART NO.
DAM-10

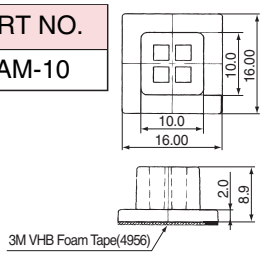

SUPPORT

WIRE STANDOFF

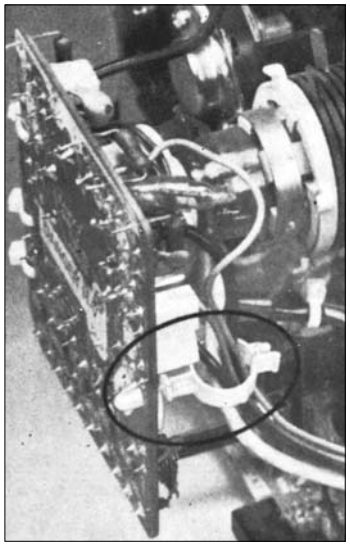

For retaining wires, cable, components or tubing away from panel or conductive chassis. Finger grip can be easily locked or unlocked for revisions. Hand installed in pre-drilled hole.

Material: Nylon Color: Natural

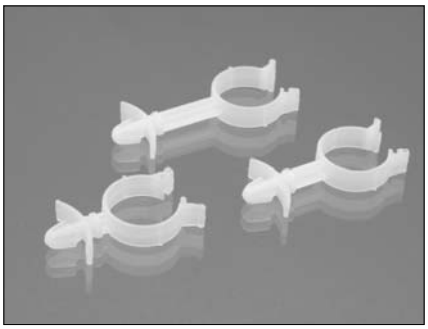

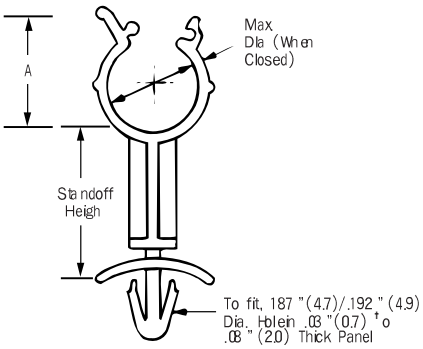

Part Number	Maximum Diameter Inches (mm)	Height of Standoff Inches (mm)	A
DAWS66	.240 (6.1)	.25 (6.4)	12.5
DAWS612	.240 (6.1)	.50 (12.7)	12.5
DAWS619	.240 (6.1)	.75 (19.1)	12.5
DAWS86	.340 (8.6)	.25 (6.4)	15
DAWS812	.340 (8.6)	.50 (12.7)	15
DAWS819	.340 (8.6)	.75 (19.1)	15
DAWS116	.470 (11.9)	.25 (6.4)	20
DAWS112	.470 (11.9)	.50 (12.7)	20
DAWS119	.470 (11.9)	.75 (19.1)	20
DAWS206	.790 (20.1)	.25 (6.4)	27
DAWS2012	.790 (20.1)	.50 (12.7)	27
DAWS2019	.790 (20.1)	.75 (19.1)	27

TWIST-LOK STANDOFF

Lifts wires of board to avoid hot components
Cable and wire bundles load and unload with a fingergertip twist

Barbed Arrow locks to chassis by hand
Material: Nylon 6/6,
Color: Natural

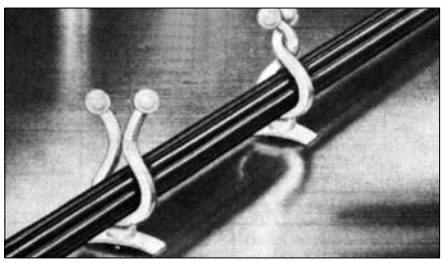

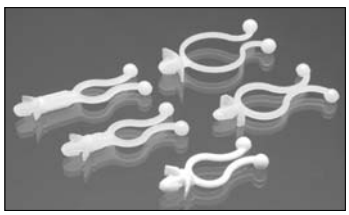

PART NO.
DASTL-INC

Part No	A	B, Ref	C.Wire Bundle Dia
DASTL-2NA	3/16(4.76)	.90(23)	.27(7) ±1.58
DASTL-3NA	3/16(4.76)	.98(25)	.400-500 ±1/16 (10.16-12.7 ±1.58)
DASTL-8NA	1/2(12.7)		
DASTL-12NA	3.4(19.05)		
DASTL-16NA	1(25.4)		
DASTL-20NA	1-1/4(31.75)		
DASTL-3NB	3/16(4.76)	1.18(29.97)	.500-600 ±1.16 (12.7-15.24 ±1.58)
DASTL-8NB	1/2(12.7)		
DASTL-12NB	3.4(19.05)		
DASTL-16NB	1(25.4)		
DASTL-20NB	1-1/4(31.75)		
DASTL-1NC	(32)	1.18(14)	4.2 ø
DASTL-2NC	(6)	1.18(14)	3.5 ø
DASTL-3ND	(6)	40	24 ø
DASTL-5ND	(5.0)	(34.26)	16 ø
DASTL-20NE	(25.4)	(35.26)	20 ø

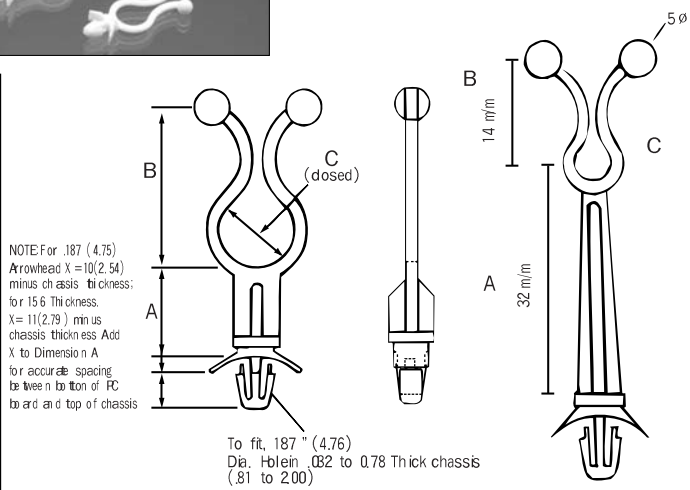

SUPPORT

TWIST-LOK

Nylon wire fastenters hold up to 20 lbs,tensile strength Molded with no sharp edges to cut insulator. With fingertip twist loads or unloads bundle.
Material : Nylon 6/6 Color : Natural

Part No.	Dimension in mm		Pkg. Qty
	Length	Bundle Dia,	
DA-21	21.5	4.0	1000
DA-23	26.2	8.2	1000
DA-26	29.5	11.2	1000
DA-30	30.8	14.5	1000
DA-38	38.0	18.0	1000
DA-40	40.0	22.0	1000

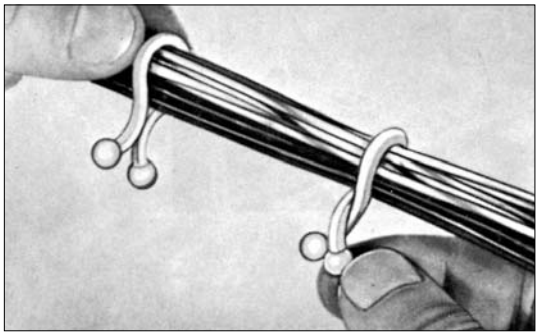

Part Number : DA-27
Material : Nylon 66
Color : Natural or Black
Flammability : UL94V-2 or 94V-0

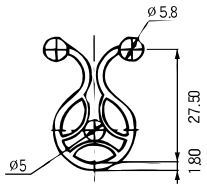

SADDLE WIRE

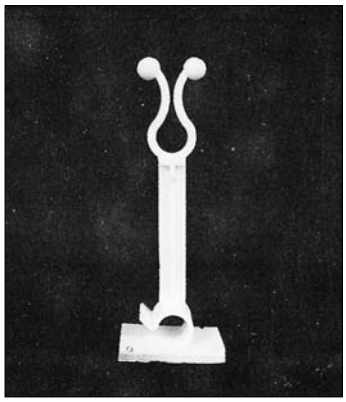

Material : Nylon 66
Color : Natural

PART NO.	A	B
DASW-01	50.8	21.64

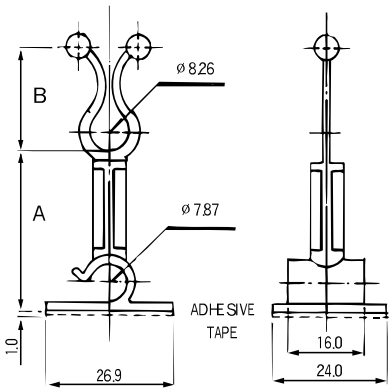

HINGED TWIST LOCK

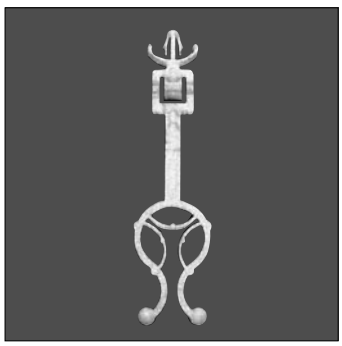

Part Number : DASTL-58
Material : Nylon 66
Color : Natural
Flammeability : UL94V-2 or 94V-0

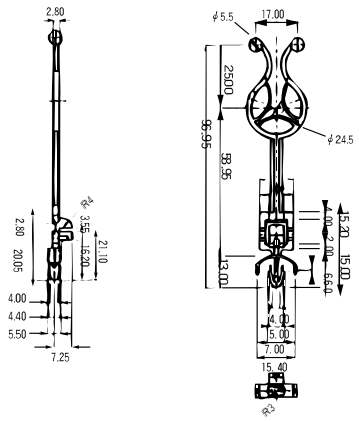

SUPPORT

TWIST-LOK MOUNT

MATERIAL : NYLON 66 94V-2

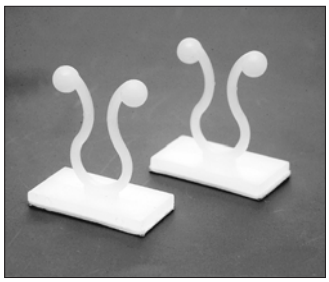

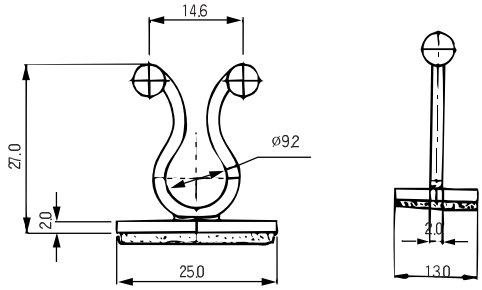

PART NO.
DATLM 475

TWIST-LOK HINGED

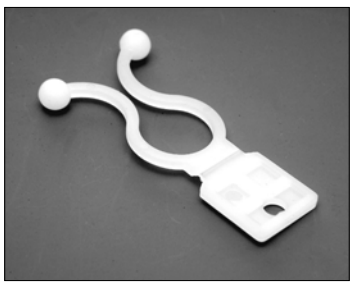

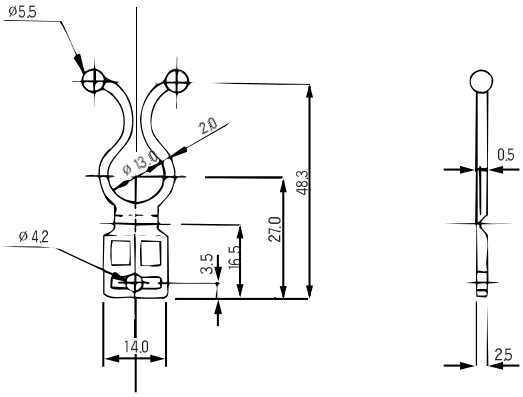

- Mounts securely with #8 (M4) screw, or a rivet
- Wires can be routed in any direction
- Simply twist to open and close for wiring changes and repairs

- Material: Nylon 6/6,
- Color: Natural
- Standard Pack: 1000 per bag

PART NO.
TLH 1348

WIRE CLIP

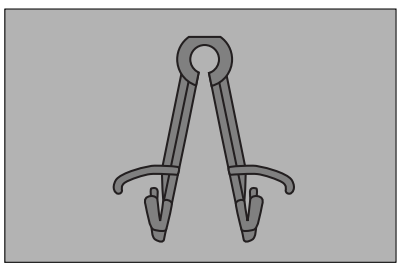

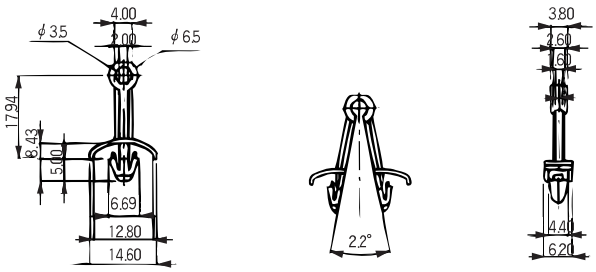

PART NO.
DAWC 354

- Material: Nylon 66
- Color: Natural

SUPPORT

TWIST - LOK

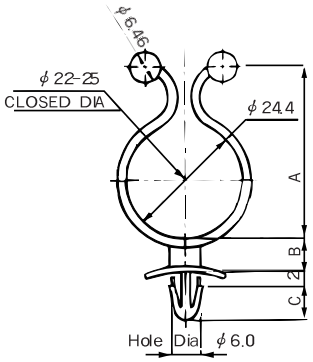

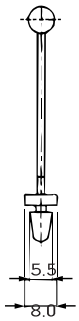

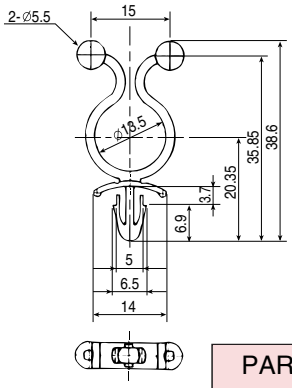

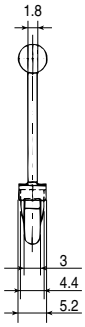

Chassis thickness 1.9t

UNIT : mm

PART. NO	A	B	C	Closed dia
DATL-250	36.25	5.5	9.5	22 ø ~25 ø

- Material : Nylon 6/6
- Color : Natural

PART NO.
DATL-260

- CHASSIS HOLE : ϕ5
- BUNDLE DIA : ϕ13

WIRE ROUTING

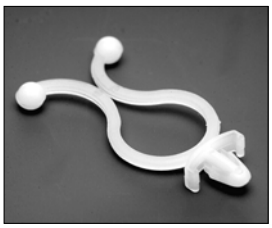

- Material : Nylon 66
- Color : Natural

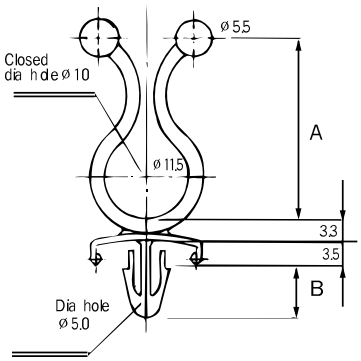

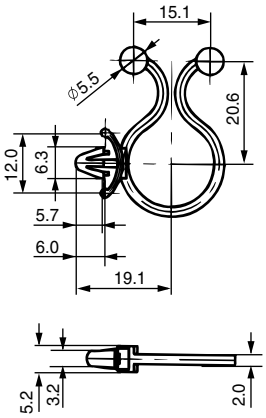

Chassis thickness : 0.8~2.0t

PART. NO	A	B	Bundle dia hole
PAWR-100	25.15	7.0	ø10 ±1.5
PAWR-160	34.26	7.0	ø 16

PART NO.
PAWR-S185

WIRE LOCKING CLAMP

- Material : Nylon 66
- Color : Natural ø
- Chassis : 1.0~1.6mm

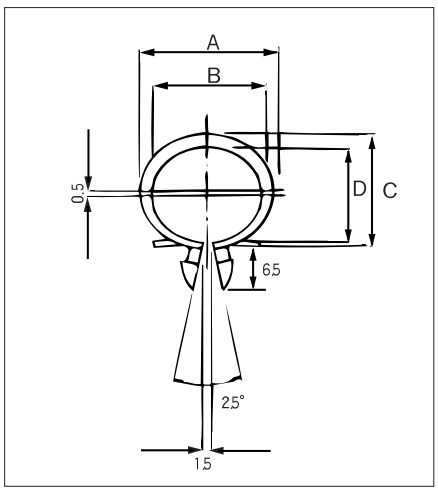

Part No	A	B	C	D
DAWLC 1	22.5	19.5	19	16
DAWLC 2	17.5	14.5	14	11

SUPPORT

SIDE LOCKING SADDLE

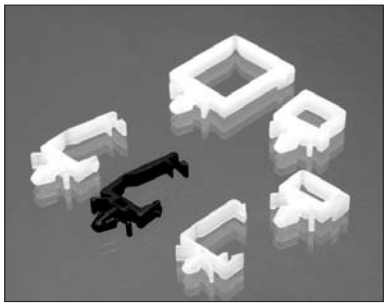

- Material: Nylon 66
- Color: Natural

Nylon Saddle for gathering and directing single or groups of cables at low cost. Two types Regular gate for easy cable entry that also prevents unintentional cable exit or
Latch gate for easy cable entry and automatic locking.
Finger pressure installation into 4.8 mm diametermounting hole.
Self adjusts to various panel thicknesses.

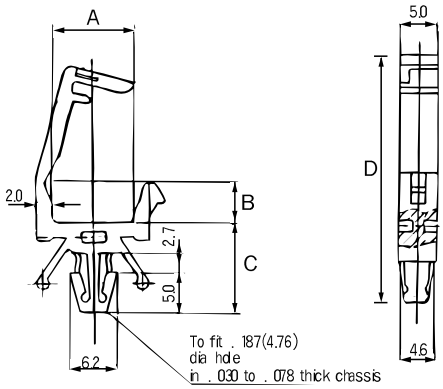

PART NO.	DIMENSIONS(mm)			
	A	B	C	D
DSLS 110	10.7	5.0	11.7	18.5
DSLS 111	16.5	10.0	11.6	23.5
DSLS 111A	16.4	10.0	11.8	24.0
DSLS 112	18.0	22.2	12.2	26.5

SIDE LOCKING SADDLE

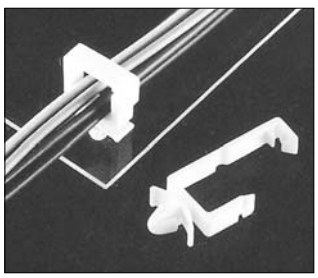

PART NO.
DSLS-100

- Material: Nylon 66
- Color: Natural
- Hole Dia : ϕ3.5

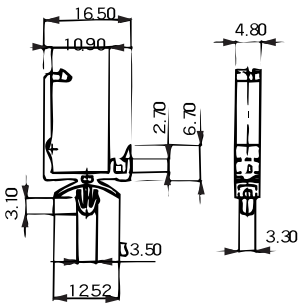

PART NO.
DALS-30

- Material: Nylon 66

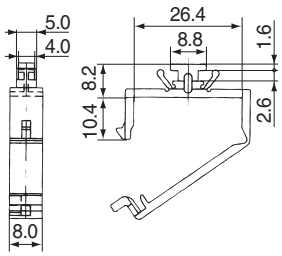

LOCKING SADDLE

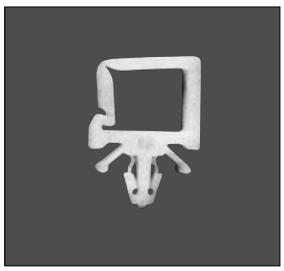

PART NO.
LS 130

- Material: Nylon 66
- Color: Natural

Nylon Saddle for gathering and directing single or groups of cables at low cost. Two types Regular gate for easy cable entry that also prevents unintentional cable exit or
Latch gate for easy cable entry and automatic locking.
Finger pressure installation into 4.8 mm diametermounting hole.
Self adjusts to various panel thicknesses.

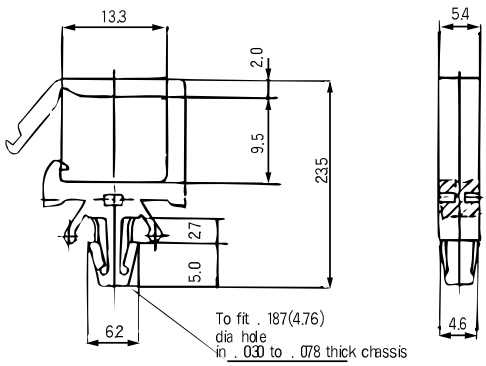

SUPPORT

WIRE SADDLE

Nylon Saddle for gathering and directing single or groups of cables at low cost. Two types Regular gate for easy cable entry that also prevents unintentional cable exit or
Latch gate for easy cable entry and automatic locking.
Finger pressure installation into 4.8 mm diametermounting hole.
Self adjusts to various panel thicknesses.

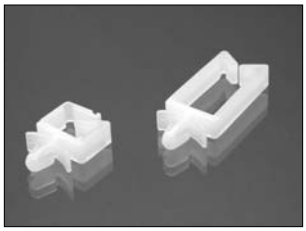

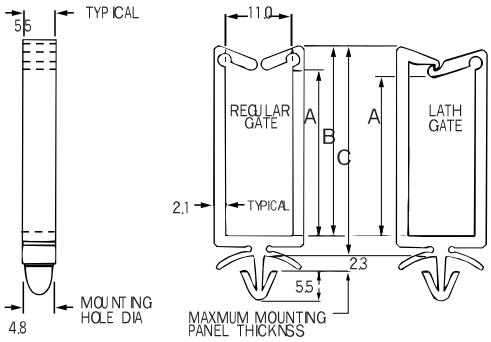

Material: Nylon 6/6

Part No.	Type	Dimension in mm			Pkg. Qty.
		A	B	C	
DAWS 1N	Regular Gate	4.4	9.5	13.0	1000
	Latch Gate	3.6	9.5	13.0	
DAWS 2N	Regular Gate	9.9	14.7	18.2	1000
	Latch Gate	9.1	14.7	18.2	
DAWS 3N	Regular Gate	19.0	23.8	27.0	1000
	Latch Gate	18.2	23.8	27.0	
DAWS 4N	Regular Gate	27.0	31.7	35.0	1000
	Latch Gate	26.2	31.7	35.0	

WIRE SADDLE

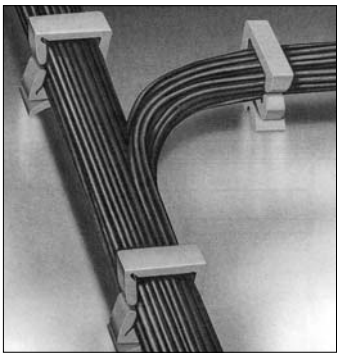

Routes cables quickly and easily.
Install by hand.
Material: Nylon 6/6

PART NO.
DAWS - 1NA

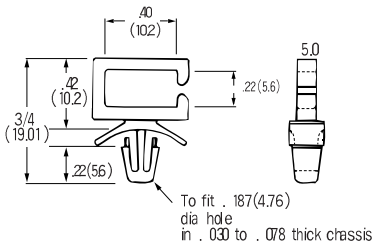

PART NO.
DAWS - 2NA

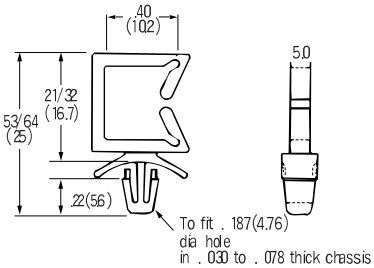

WIRE SADDLE

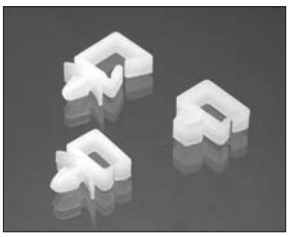

MATERIAL : NYLON 66 94V-2

PART NO.
DAWS 711

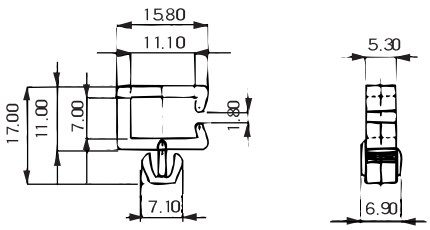

LOCK SADDLE

PART NO.
DALS-10

Material: Nylon 6/6

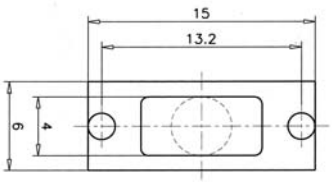

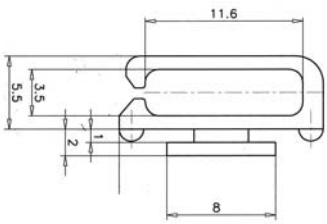

SUPPORT

WIRE SADDLE

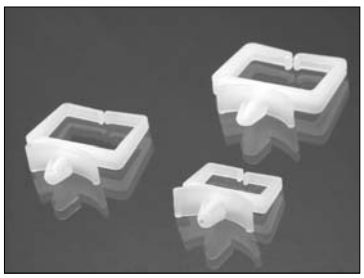

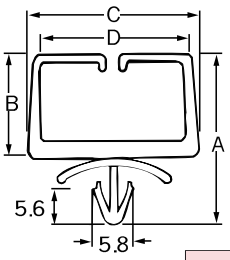

PART NO.	DIMENSION(mm)				Hole dai
	A	B	C	D	
DWAS-1NB	21.0	11.5	20.0	15.5	4.8㎜
DWAS-4NB	27.7	17.3	25.0	21.0	4.8㎜
DWAS-5NB	30.6	19.0	28.5	22.5	5.5㎜
DWAS-6NB	33.0	21.8	31.0	25.0	5.5㎜

- Material : NYLON 66
- Color : Nataral

MICRO WIRE SADDLE

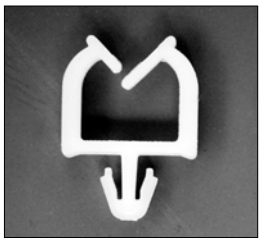

- Use on densely packed PC boards and other limited space applications
- Snaps into a.07″ (1.8mm) diameter hole in a1/16″ (1.6mm)thick board
- Holds up to ten 26 guage wires (1/32″ [.8mm] outside diameter)
- Wire bundle installs simply by pressing down on retaining arms which flex to accept load than spring back into place
- Material: Nylon 6/6
- Color: Natural
- Standard Pack: 1000 per bag

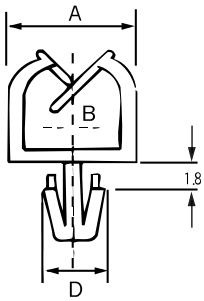

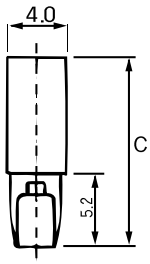

3N＝3ø HOLE

PART NO.	DIMENSION(mm)			
	A	B	C	D
DAMWS-1N	9.0	6.3	12.4	4.3
DAMWS-2N	10.5	7.7	14.3	4.3
DAMWS-3N	9.0	8.0	14.3	3.7

DAMWC-1S

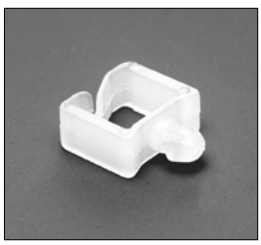

PART NO.
DAMWC-IS

- Material : NYLON 66
- Color : Natural

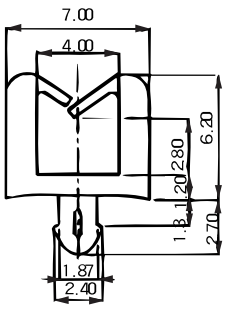

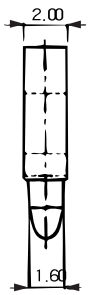

ADHESIVE MICRO WIRE SADDLE

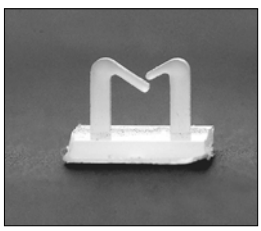

PART NO.
DAMWC-ISA

- Material : NYLON 66
- Double adhesive Tape

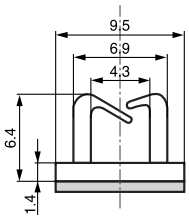

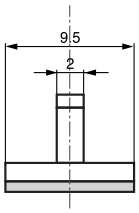

SUPPORT

TENSION RACK CARD GUIDE

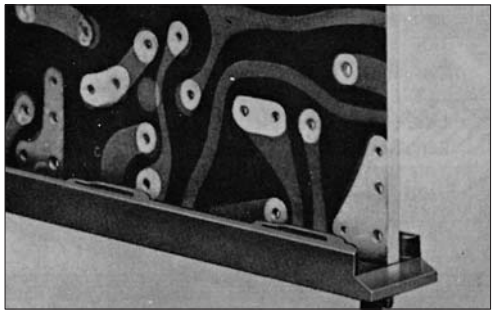

- Snap-mounts to metal, wood or plastic chassis or machine casing
- Mterial: Polycarbonate,
- Color: Black
- Standard Pack: 500 per bag

Part No.	Dim. "A"	Dim. "B"
TRCG-3.300	3.3(83.8)	3(76.2)

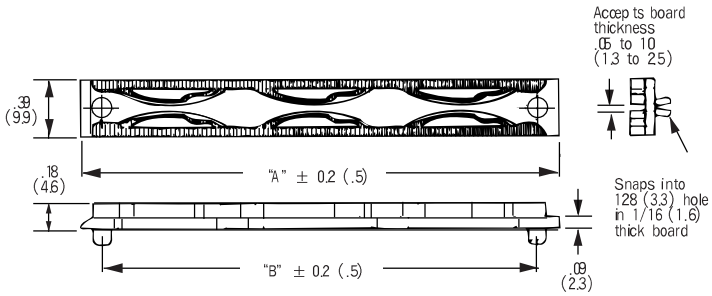

CARD GUIDES

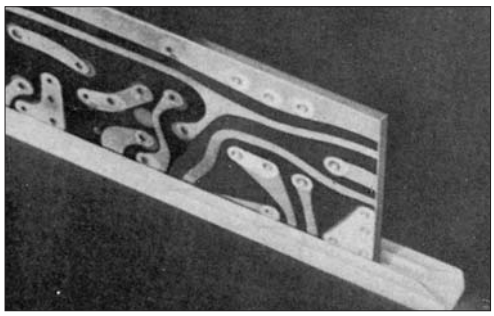

- For quick installation, insert rear pin into .120″×.218″ (3.05×5.54mm) slot and snap front pin into .125″ (3.18mm)dia. hole
- Material: Nylon6/6,
- Color: Natural

(mm)

Part No.	Dim.A	Dim.B
DCG-1	76.20	63.50
DCG-2	101.62	88.60
DCG-3	113.6	88.60

Tolerance ± .01(.25)

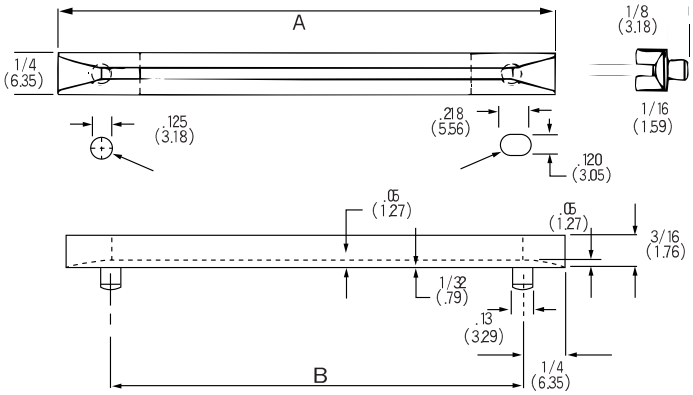

CARD GUIDE

PART NO.
DCG-B1
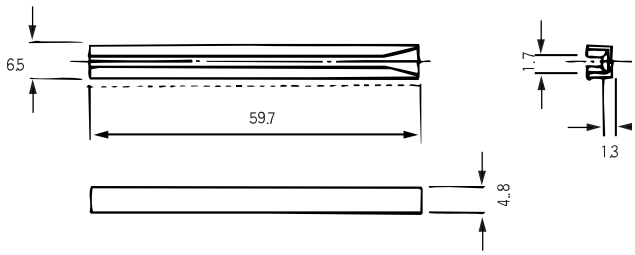
- Material : NYLON 66
- Color : Nataral